APPENDIX C

PLANS AND PROFILES OF THE SHORT LIST OF ALTERNATIVES

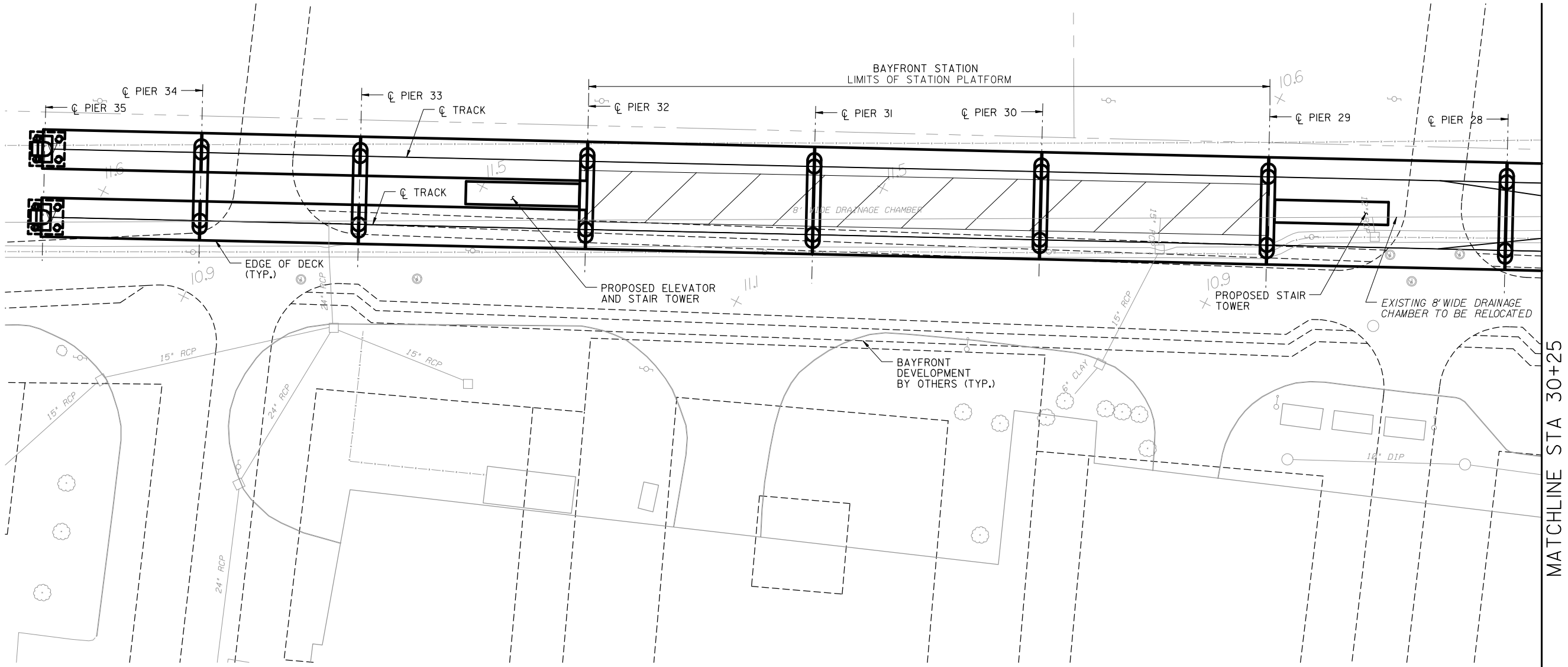

PLAN

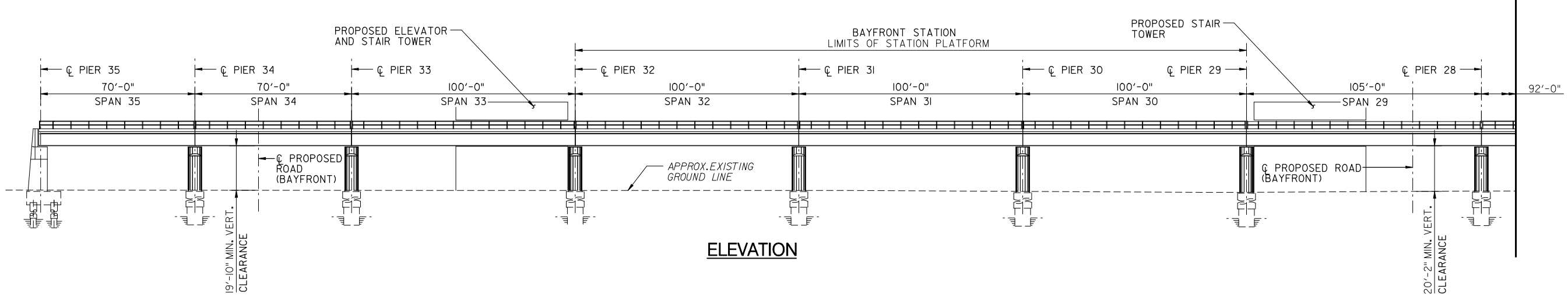

ELEVATION

1/6/2011 2:00:36 PM
J:\052051 AKRF - NJ TRANSIT HBLR 440 EXTENSION\05-WORKING TECHNICAL\STRUCTURAL\CADD\SHEETS\RT_440-STR_GPE1A01.DGN

NJ TRANSIT

Gannett Fleming Transit & Rail Systems

AKRF

DATE:	REVISIONS	No.

DESIGNED: P. THOMPSON
DRAWN: P. THOMPSON
CHECKED: W. FARROW
APPROVED:

HUDSON-BERGEN LIGHT RAIL
ROUTE 440 EXTENSION ALTERNATIVES ANALYSIS

ALIGNMENT ALTERNATIVE 1A
GENERAL PLAN AND ELEVATION 1
STA 30+25 TO END VIADUCT

SCALE: 1" = 50'
FILE NAME:
DRAWING No.: REV:
DATE: DECEMBER 2010

CONTRACT No.
ISSUE ALTERNATIVES ANALYSIS
SHEET No. 1 OF 19

NOTE: DO NOT SCALE THIS DRAWING

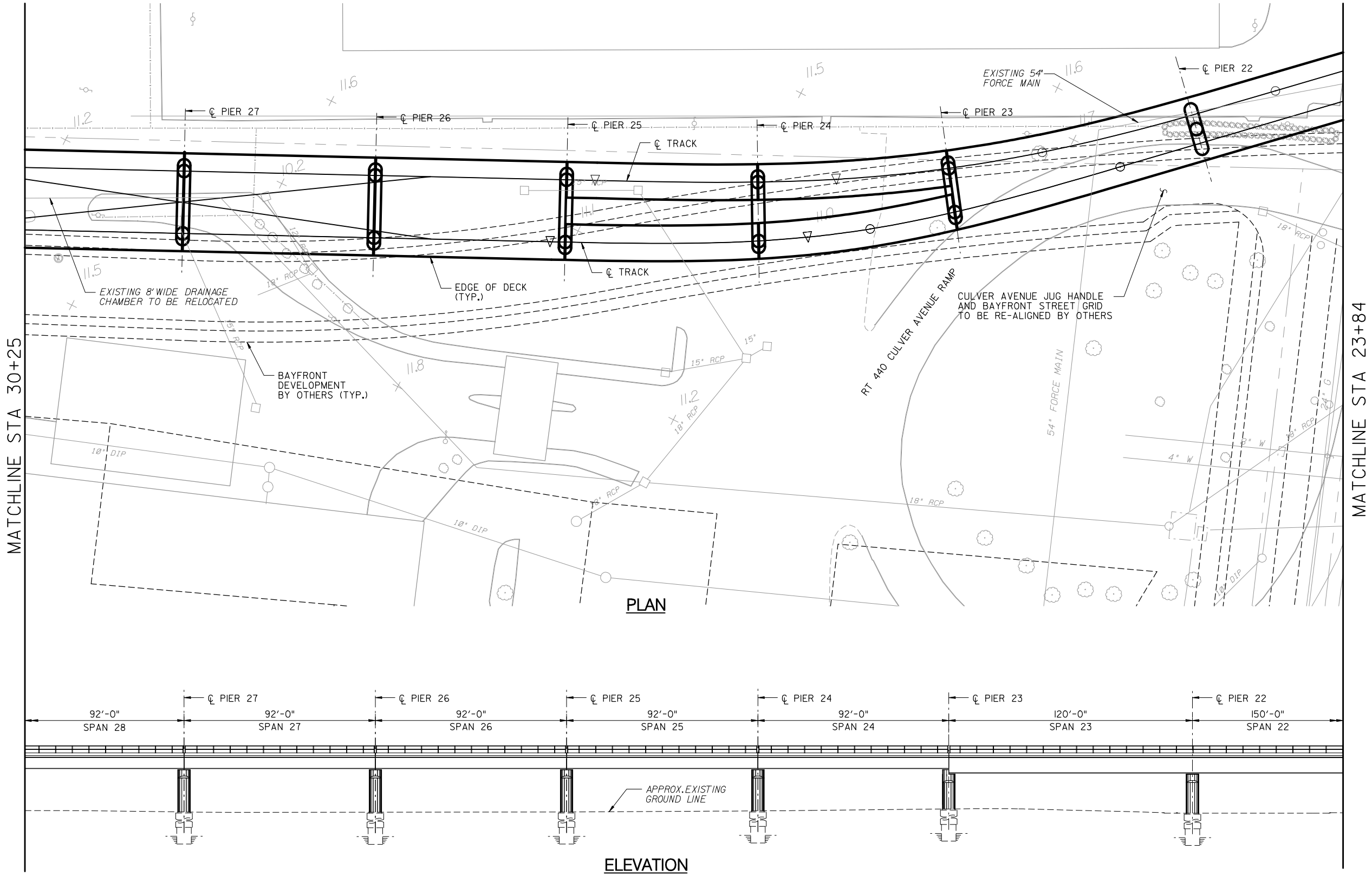

NJ TRANSIT

Gannett Fleming Transit & Rail Systems

AKRF

DATE:	REVISIONS	No.

DESIGNED: P. THOMPSON
DRAWN: P. THOMPSON
CHECKED: W. FARROW
APPROVED:

HUDSON-BERGEN LIGHT RAIL
ROUTE 440 EXTENSION ALTERNATIVES ANALYSIS

ALIGNMENT ALTERNATIVE 1A
GENERAL PLAN AND ELEVATION 2
STA 23+84 TO STA 30+25

SCALE: 1" = 50'
FILE NAME:
DRAWING No.: REV:
DATE: DECEMBER 2010

CONTRACT No.
ISSUE: ALTERNATIVES ANALYSIS
SHEET No. 2 OF 19

NOTE: DO NOT SCALE THIS DRAWING

1/6/2011 2:00:38 PM
J:\052051 AKRF - NJ TRANSIT HBLR 440 EXTENSION\05-WORKING TECHNICAL\STRUCTURAL\CADD\SHEETS\RT_440-STR_GPE1A02.DGN

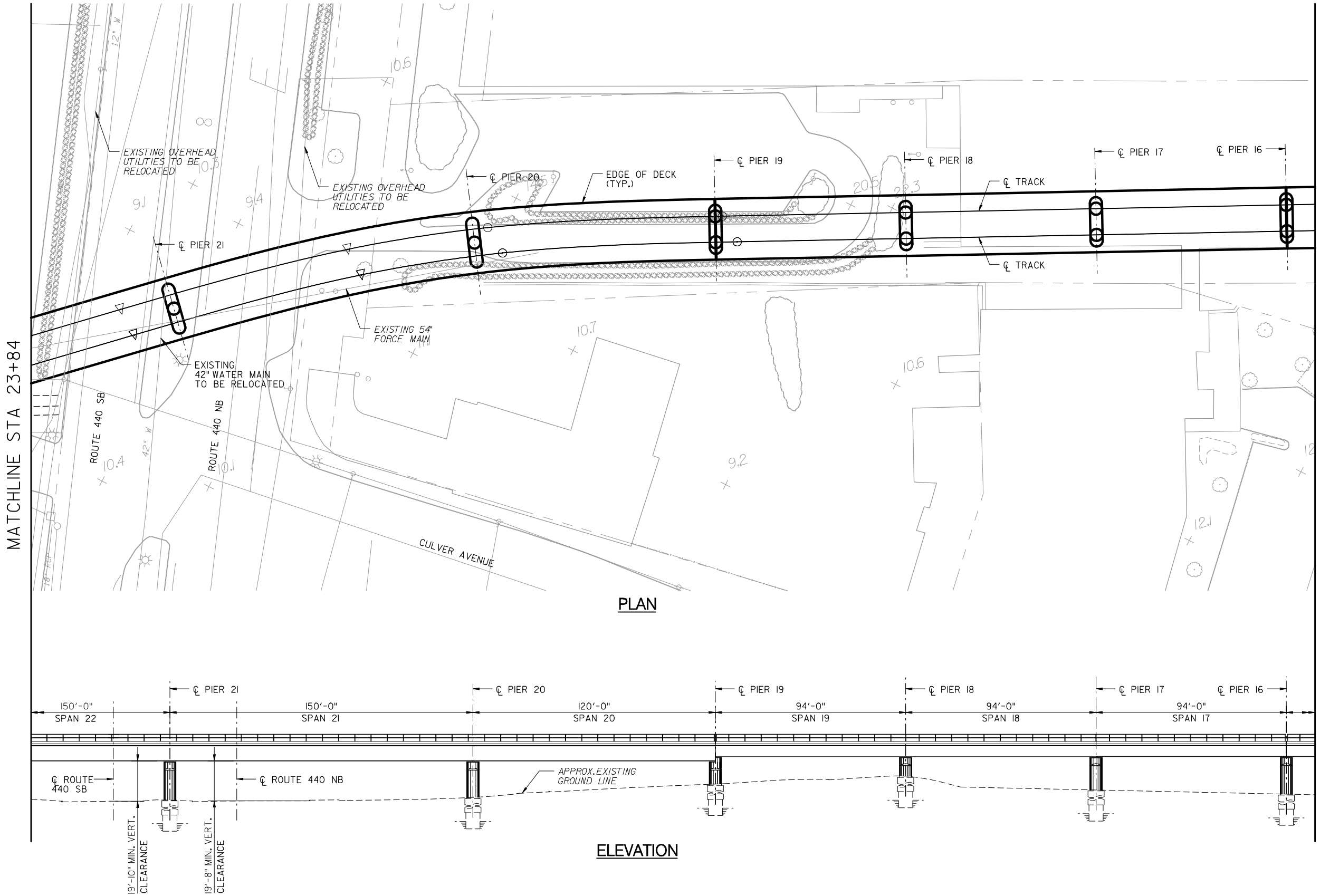

1/6/2011 2:00:41 PM
J:\052051 AKRF - NJ TRANSIT HBLR 440 EXTENSION\05-WORKING TECHNICAL\STRUCTURAL\CADD\SHEETS\RT_440-STR_GPE1A03.DGN

NJTRANSIT

Gannett Fleming Transit & Rail Systems

AKRF

DATE:	REVISIONS	No.

DESIGNED: P. THOMPSON
DRAWN: P. THOMPSON
CHECKED: W. FARROW
APPROVED:

HUDSON-BERGEN LIGHT RAIL
ROUTE 440 EXTENSION ALTERNATIVES ANALYSIS

ALIGNMENT ALTERNATIVE 1A
GENERAL PLAN AND ELEVATION 3
STA 17+44 TO STA 23+84

SCALE: 1" = 50'
FILE NAME:
DRAWING No.: REV:
DATE: DECEMBER 2010

CONTRACT No.
ISSUE: ALTERNATIVES ANALYSIS
SHEET No. 3 OF 19

NOTE: DO NOT SCALE THIS DRAWING

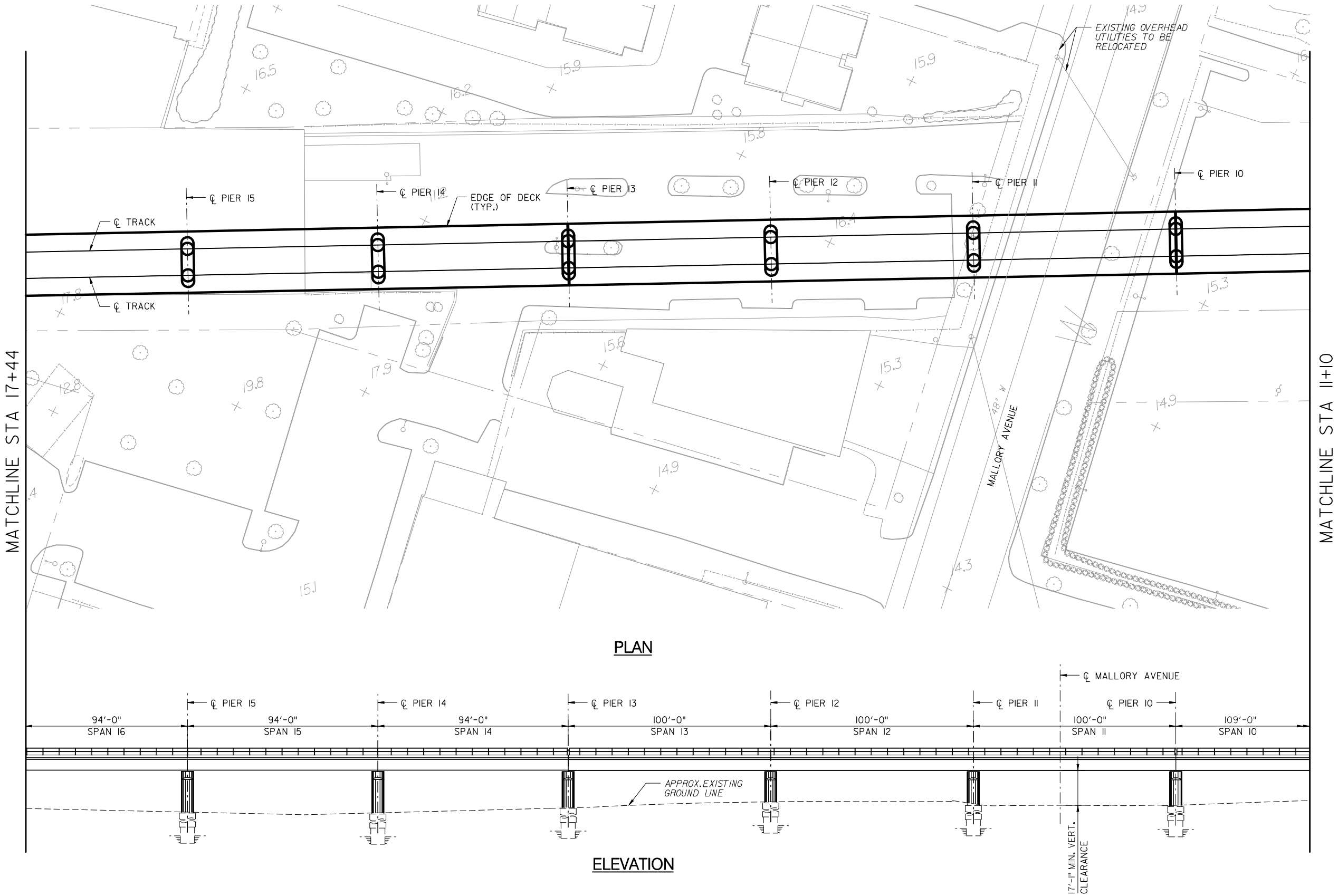

NJ TRANSIT

Gannett Fleming Transit & Rail Systems

AKRF

DATE:	REVISIONS	No.

DESIGNED: P. THOMPSON
DRAWN: P. THOMPSON
CHECKED: W. FARROW
APPROVED:

HUDSON-BERGEN LIGHT RAIL
ROUTE 440 EXTENSION ALTERNATIVES ANALYSIS

ALIGNMENT ALTERNATIVE 1A
GENERAL PLAN AND ELEVATION 4
STA 11+10 TO STA 17+44

SCALE: 1" = 50'
FILE NAME:
DRAWING No.: REV:
DATE: DECEMBER 2010

CONTRACT No.
ISSUE ALTERNATIVES ANALYSIS
SHEET No. 4 OF 19

NOTE: DO NOT SCALE THIS DRAWING

1/6/2011 2:00:44 PM
J:\052051 AKRF - NJ TRANSIT HBLR 440 EXTENSION\05-WORKING TECHNICAL\STRUCTURAL\CADD\SHEETS\RT_440-STR_GPE1A04.DGN

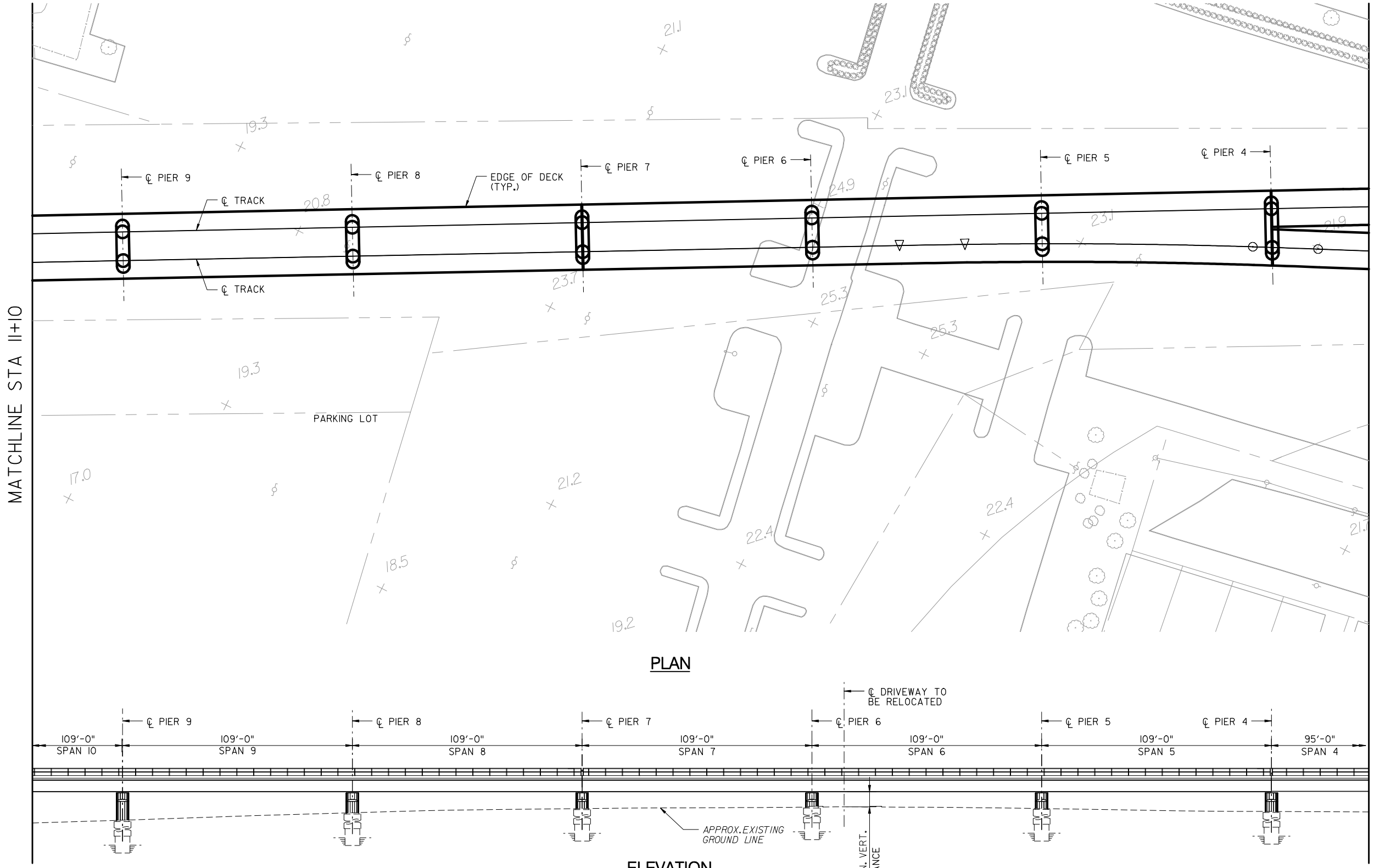

NJ TRANSIT

Gannett Fleming Transit & Rail Systems

AKRF

DATE:	REVISIONS	No.

DESIGNED: P. THOMPSON
DRAWN: P. THOMPSON
CHECKED: W. FARROW
APPROVED:

HUDSON-BERGEN LIGHT RAIL
ROUTE 440 EXTENSION ALTERNATIVES ANALYSIS

ALIGNMENT ALTERNATIVE 1A
GENERAL PLAN AND ELEVATION 5
STA 4+75 TO STA 11+10

SCALE: 1" = 50'
FILE NAME:
DRAWING No.: REV:
DATE: DECEMBER 2010

CONTRACT No.
ISSUE: ALTERNATIVES ANALYSIS
SHEET No. 5 OF 19

NOTE: DO NOT SCALE THIS DRAWING

1/6/2011 2:00:46 PM
J:\052051 AKRF - NJ TRANSIT HBLR 440 EXTENSION\05-WORKING TECHNICAL\STRUCTURAL\CADD\SHEETS\RT_440-STR_GPE1A05.DGN

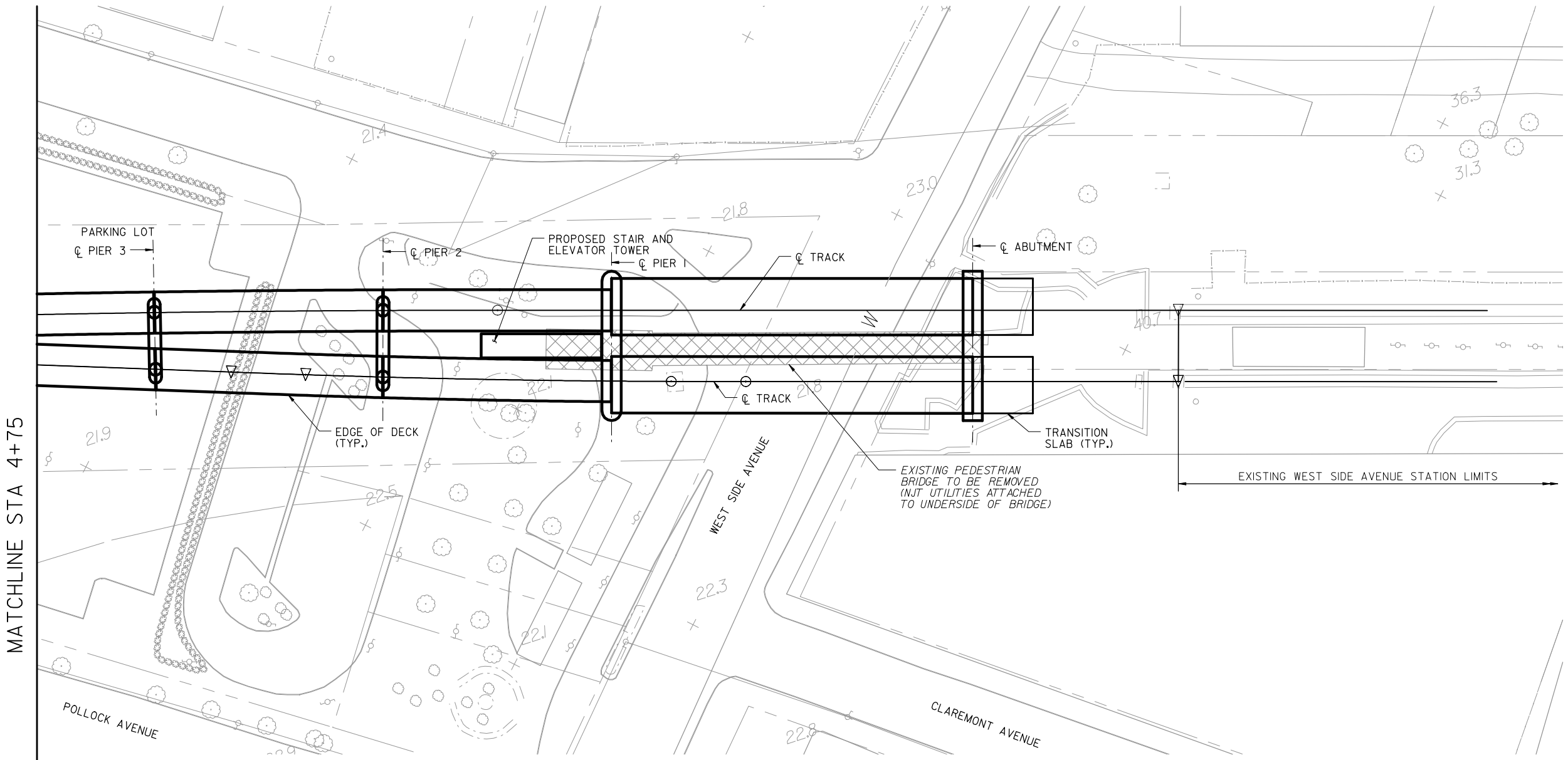

PLAN

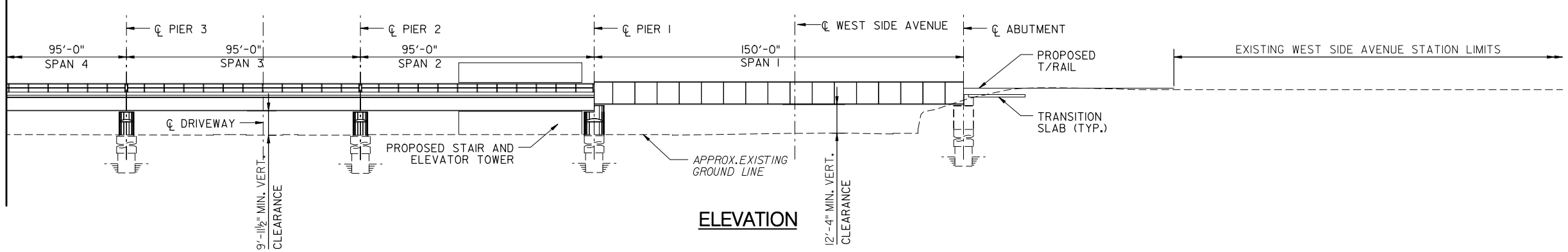

ELEVATION

NJTRANSIT

Gannett Fleming Transit & Rail Systems

AKRF

DATE:	REVISIONS	No.

DESIGNED: P. THOMPSON
DRAWN: P. THOMPSON
CHECKED: W. FARROW
APPROVED:

HUDSON-BERGEN LIGHTRAIL
ROUTE 440 EXTENSION ALTERNATIVES ANALYSIS

ALIGNMENT ALTERNATIVE 1A
GENERAL PLAN AND ELEVATION 6
STA 0+00 TO STA 4+75

SCALE: 1" = 50'
FILE NAME:
DRAWING No.: REV:
DATE: DECEMBER 2010

CONTRACT No.
ISSUE: ALTERNATIVES ANALYSIS
SHEET No. 6 OF 19

NOTE: DO NOT SCALE THIS DRAWING

1/6/2011 2:00:48 PM
J:\052051 AKRF- NJ TRANSIT HBLR 440 EXTENSION\05-WORKING TECHNICAL\STRUCTURAL\CADD\SHEETS\RT_440-STR_GPE1A06.DGN

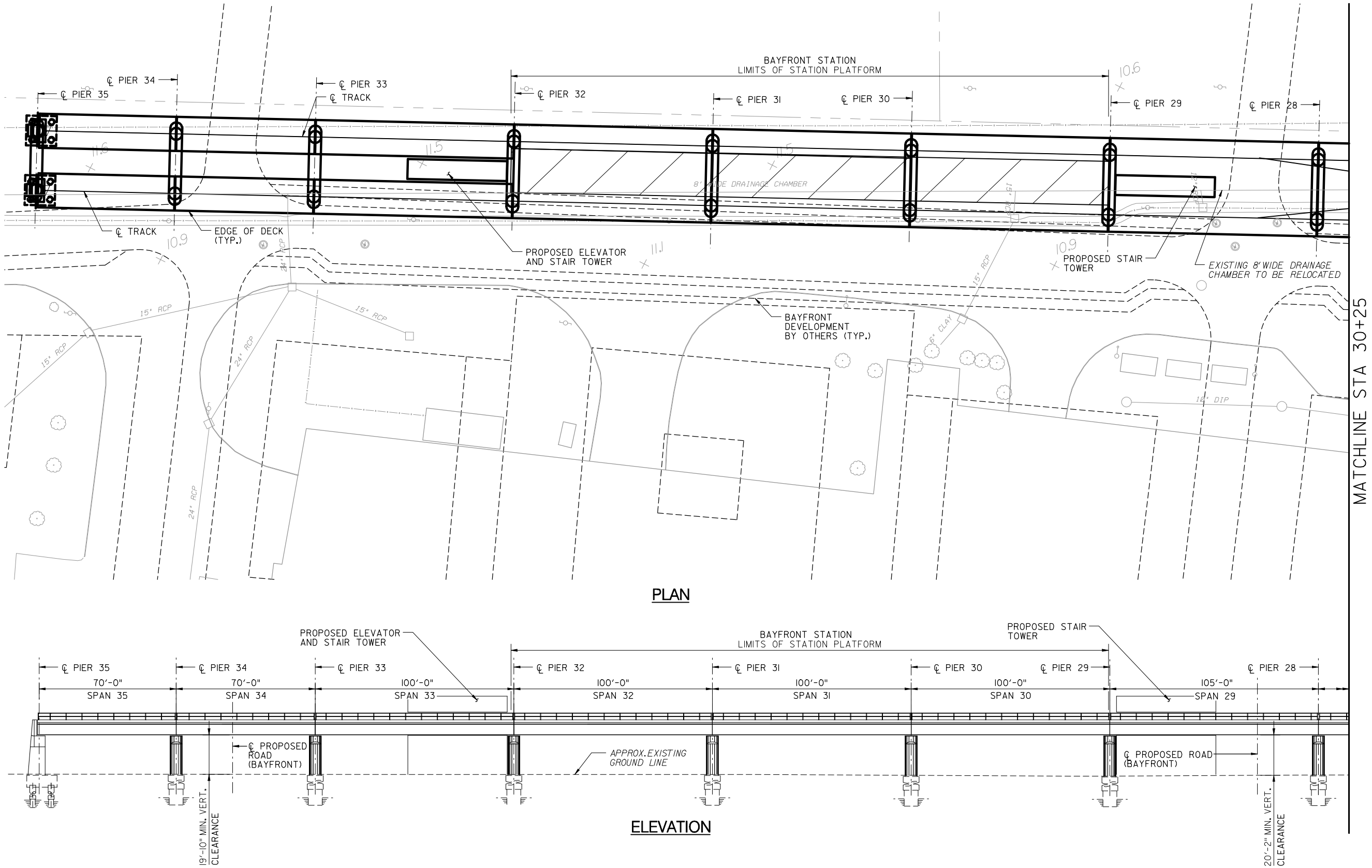

1/6/2011 2:00:54 PM
J:\052051 AKRF - NJ TRANSIT HBLR 440 EXTENSION\05-WORKING TECHNICAL\STRUCTURAL\CADD\SHEETS\RT_440-STR_GPE1C01.DGN

NJ TRANSIT

Gannett Fleming Transit & Rail Systems

AKRF

DATE:	REVISIONS	No.

DESIGNED: P. THOMPSON
DRAWN: P. THOMPSON
CHECKED: W. FARROW
APPROVED:

HUDSON-BERGEN LIGHT RAIL
ROUTE 440 EXTENSION ALTERNATIVES ANALYSIS

ALIGNMENT ALTERNATIVE 1C
GENERAL PLAN AND ELEVATION 1
STA 30+25 TO END VIADUCT

SCALE: 1" = 50'
FILE NAME:
DRAWING No.: REV:
DATE: DECEMBER 2010

CONTRACT No.
ISSUE: ALTERNATIVES ANALYSIS
SHEET No. 7 OF 19

NOTE: DO NOT SCALE THIS DRAWING

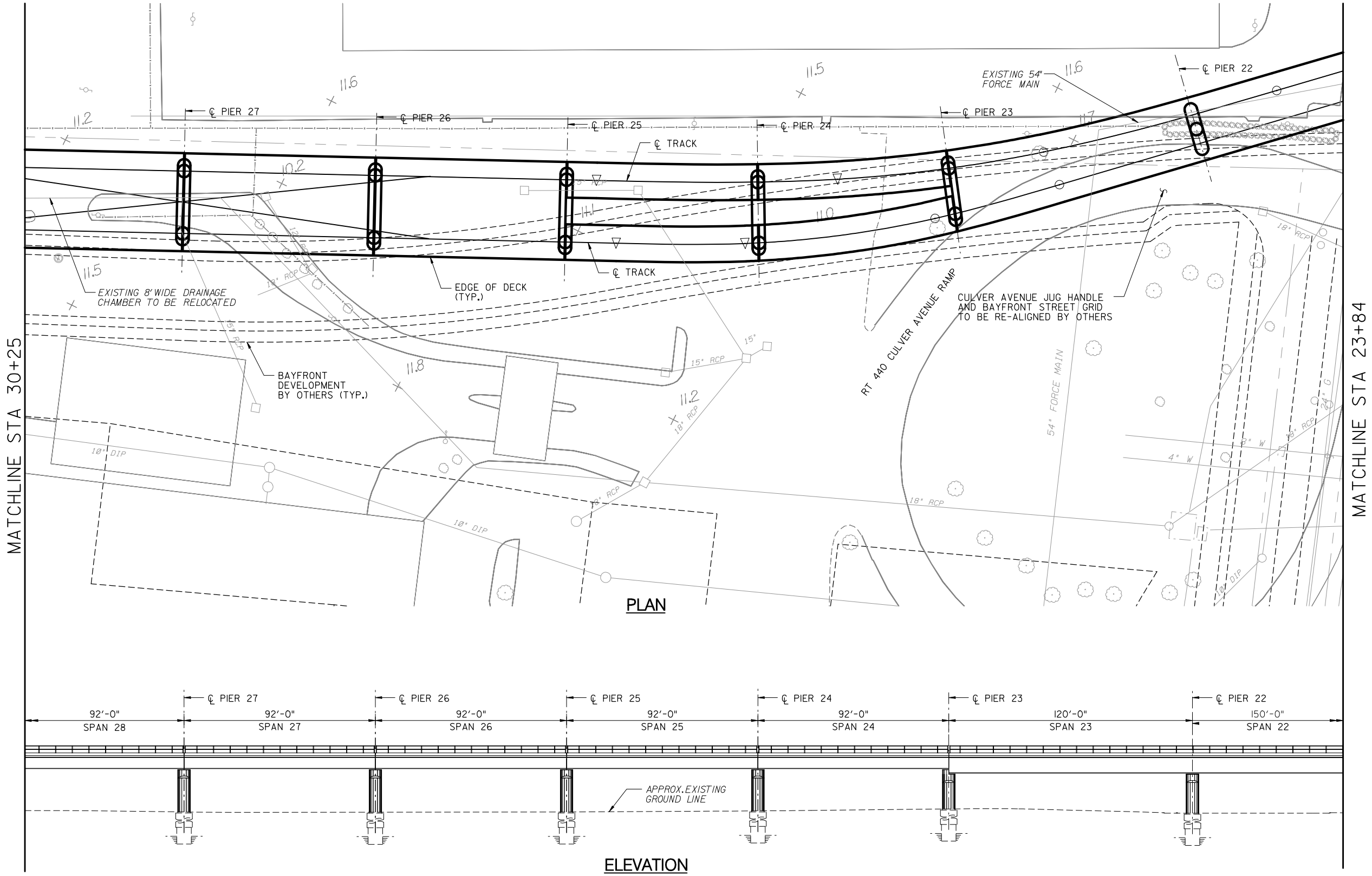

NJ TRANSIT

Gannett Fleming Transit & Rail Systems

AKRF

DATE:	REVISIONS	No.

DESIGNED: P. THOMPSON
DRAWN: P. THOMPSON
CHECKED: W. FARROW
APPROVED:

HUDSON-BERGEN LIGHT RAIL
ROUTE 440 EXTENSION ALTERNATIVES ANALYSIS

ALIGNMENT ALTERNATIVE 1C
GENERAL PLAN AND ELEVATION 2
STA 23+84 TO STA 30+25

SCALE: 1" = 50'
FILE NAME:
DRAWING No.: REV:
DATE: DECEMBER 2010

CONTRACT No.
ISSUE: ALTERNATIVES ANALYSIS
SHEET No. 8 OF 19

NOTE: DO NOT SCALE THIS DRAWING

1/6/2011 2:00:56 PM
J:\052051 AKRF - NJ TRANSIT HBLR 440 EXTENSION\05-WORKING TECHNICAL\STRUCTURAL\CADD\SHEETS\RT_440-STR_GPE1C02.DGN

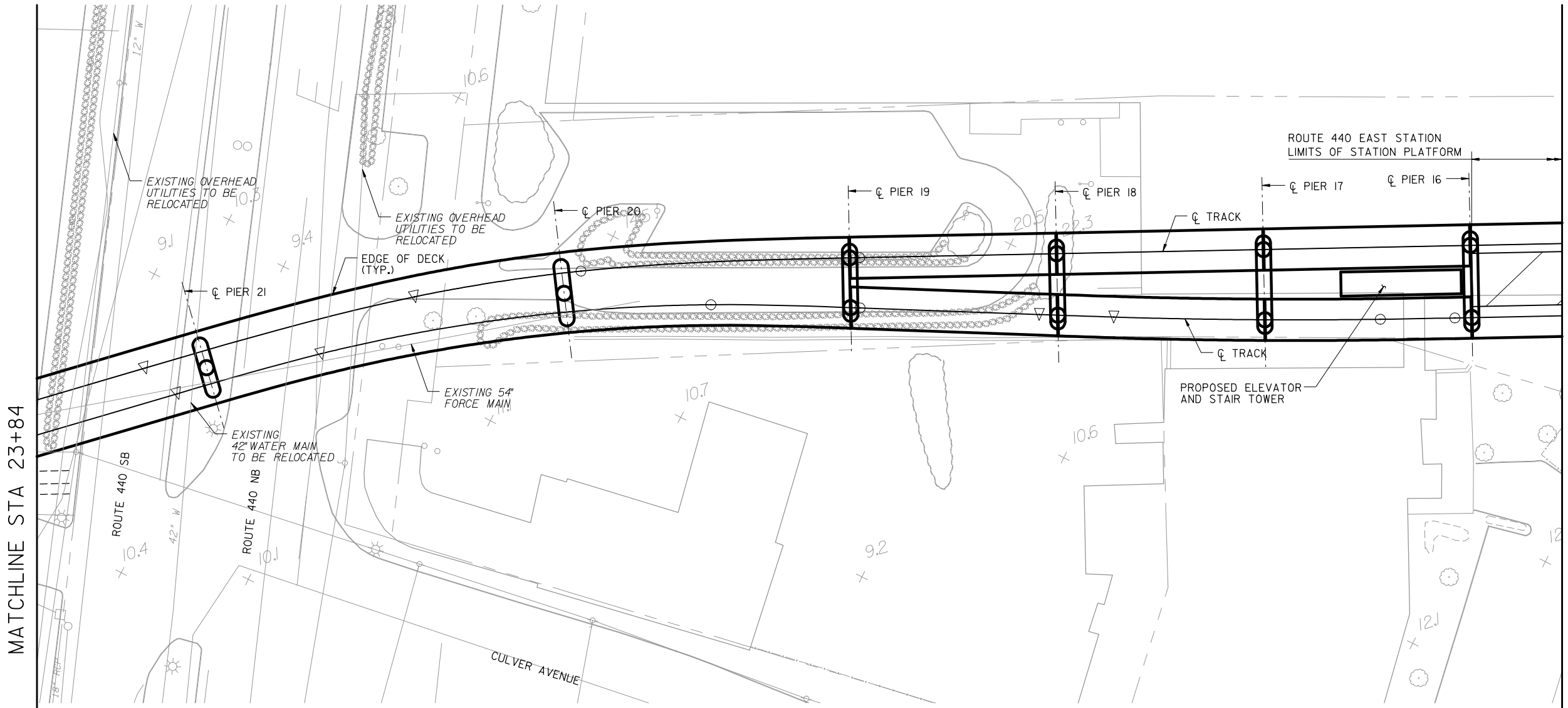

PLAN

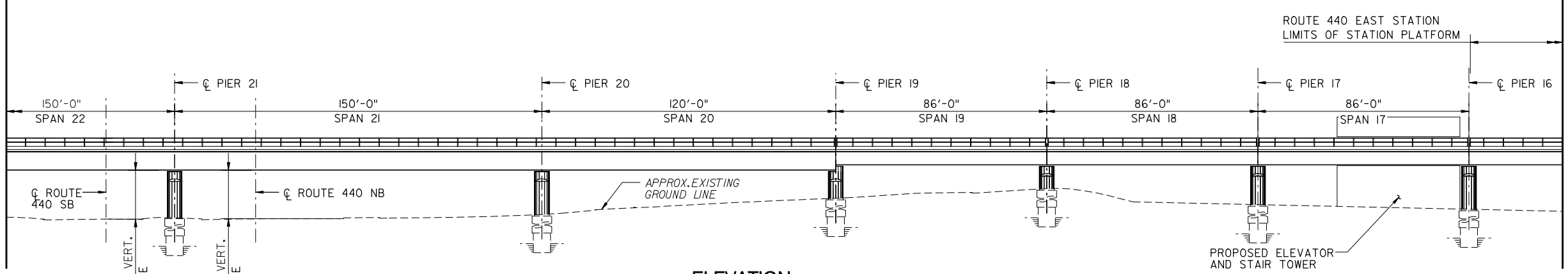

ELEVATION

1/6/2011 2:00:59 PM
J:\052051 AKRF - NJ TRANSIT HBLR 440 EXTENSION\05-WORKING TECHNICAL\STRUCTURAL\CADD\SHEETS\RT_440-STR_GPE1C03.DGN

NJ TRANSIT

Gannett Fleming Transit & Rail Systems

AKRF

DATE:	REVISIONS	No.

DESIGNED: P. THOMPSON
DRAWN: P. THOMPSON
CHECKED: W. FARROW
APPROVED:

HUDSON-BERGEN LIGHT RAIL
ROUTE 440 EXTENSION ALTERNATIVES ANALYSIS

ALIGNMENT ALTERNATIVE 1C
GENERAL PLAN AND ELEVATION 3
STA 17+44 TO STA 23+84

SCALE: 1" = 50'
FILE NAME:
DRAWING No.: REV:
DATE: DECEMBER 2010

CONTRACT No.
ISSUE ALTERNATIVES ANALYSIS
SHEET No. 9 OF 19

NOTE: DO NOT SCALE THIS DRAWING

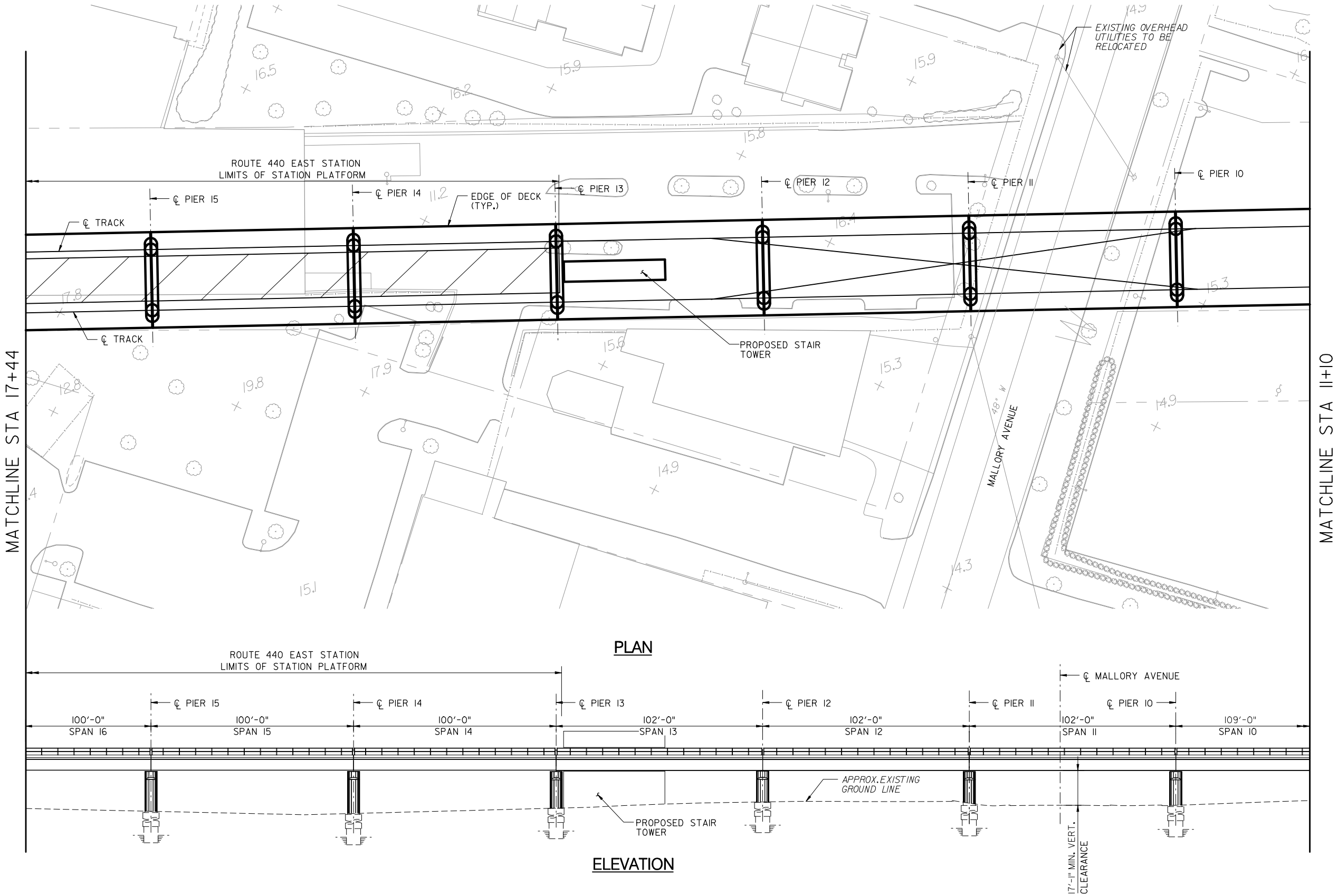

NJ TRANSIT

Gannett Fleming Transit & Rail Systems

AKRF

DATE:	REVISIONS	No.

DESIGNED: P. THOMPSON
DRAWN: P. THOMPSON
CHECKED: W. FARROW
APPROVED:

HUDSON-BERGEN LIGHT RAIL
ROUTE 440 EXTENSION ALTERNATIVES ANALYSIS

ALIGNMENT ALTERNATIVE 1C
GENERAL PLAN AND ELEVATION 4
STA 11+10 TO STA 17+44

SCALE: 1" = 50'
FILE NAME:
DRAWING No.: REV:
DATE: DECEMBER 2010

CONTRACT No.
ISSUE ALTERNATIVES ANALYSIS
SHEET No. 10 OF 19

NOTE: DO NOT SCALE THIS DRAWING

1/6/2011 2:01:02 PM
J:\052051 AKRF - NJ TRANSIT HBLR 440 EXTENSION\05-WORKING TECHNICAL\STRUCTURAL\CADD\SHEETS\RT_440-STR_GPE1C04.DGN

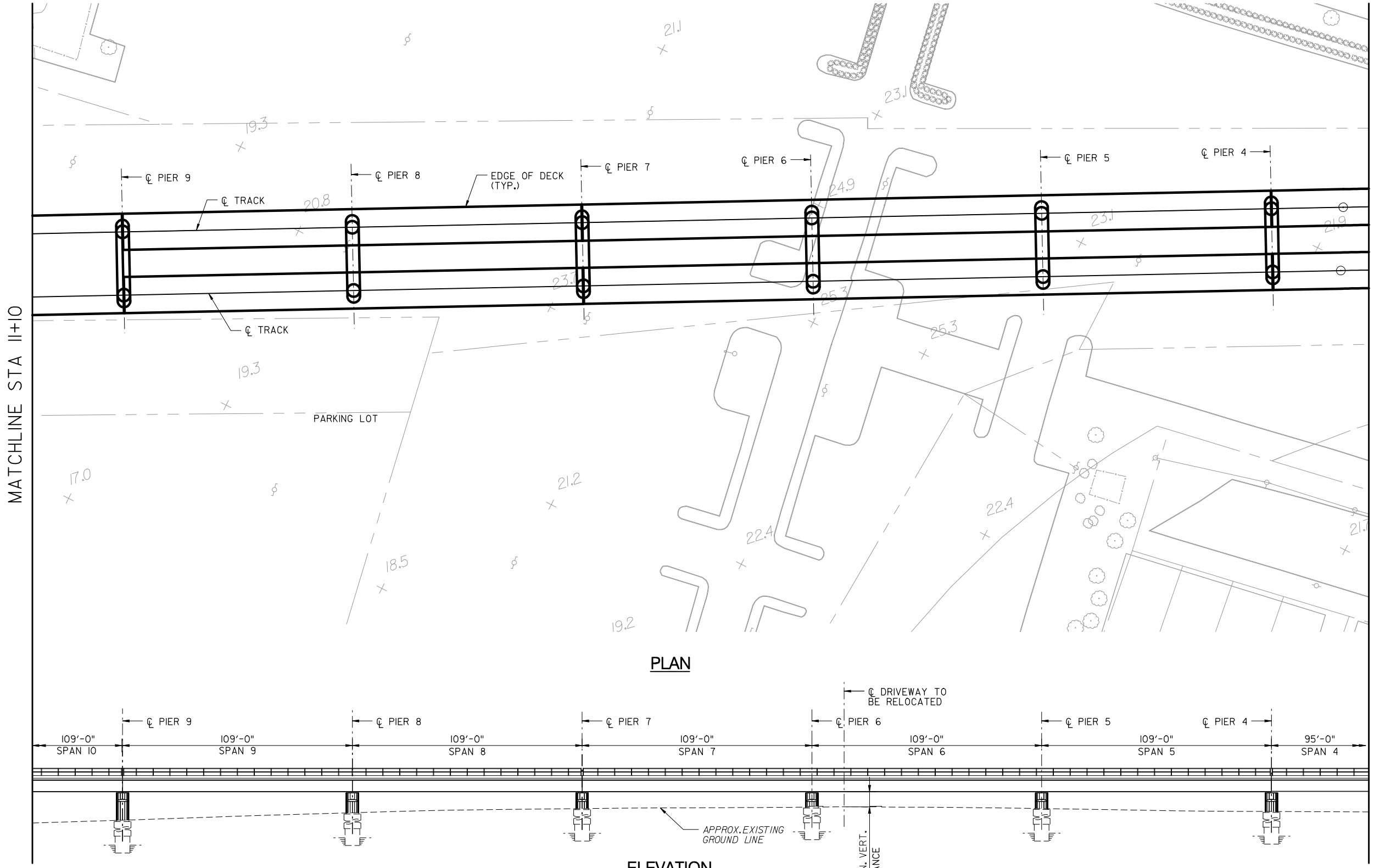

NJ TRANSIT

Gannett Fleming Transit & Rail Systems

AKRF

DATE:	REVISIONS	No.

DESIGNED: P. THOMPSON
DRAWN: P. THOMPSON
CHECKED: W. FARROW
APPROVED:

HUDSON-BERGEN LIGHT RAIL
ROUTE 440 EXTENSION ALTERNATIVES ANALYSIS

ALIGNMENT ALTERNATIVE 1C
GENERAL PLAN AND ELEVATION 5
STA 4+75 TO STA 11+10

SCALE: 1" = 50'
FILE NAME:
DRAWING No.: REV:
DATE: DECEMBER 2010

CONTRACT No.
ISSUE: ALTERNATIVES ANALYSIS
SHEET No. 11 OF 19

NOTE: DO NOT SCALE THIS DRAWING

1/6/2011 2:01:05 PM
J:\052051 AKRF - NJ TRANSIT HBLR 440 EXTENSION\05-WORKING TECHNICAL\STRUCTURAL\CADD\SHEETS\RT_440-STR_GPE1C05.DGN

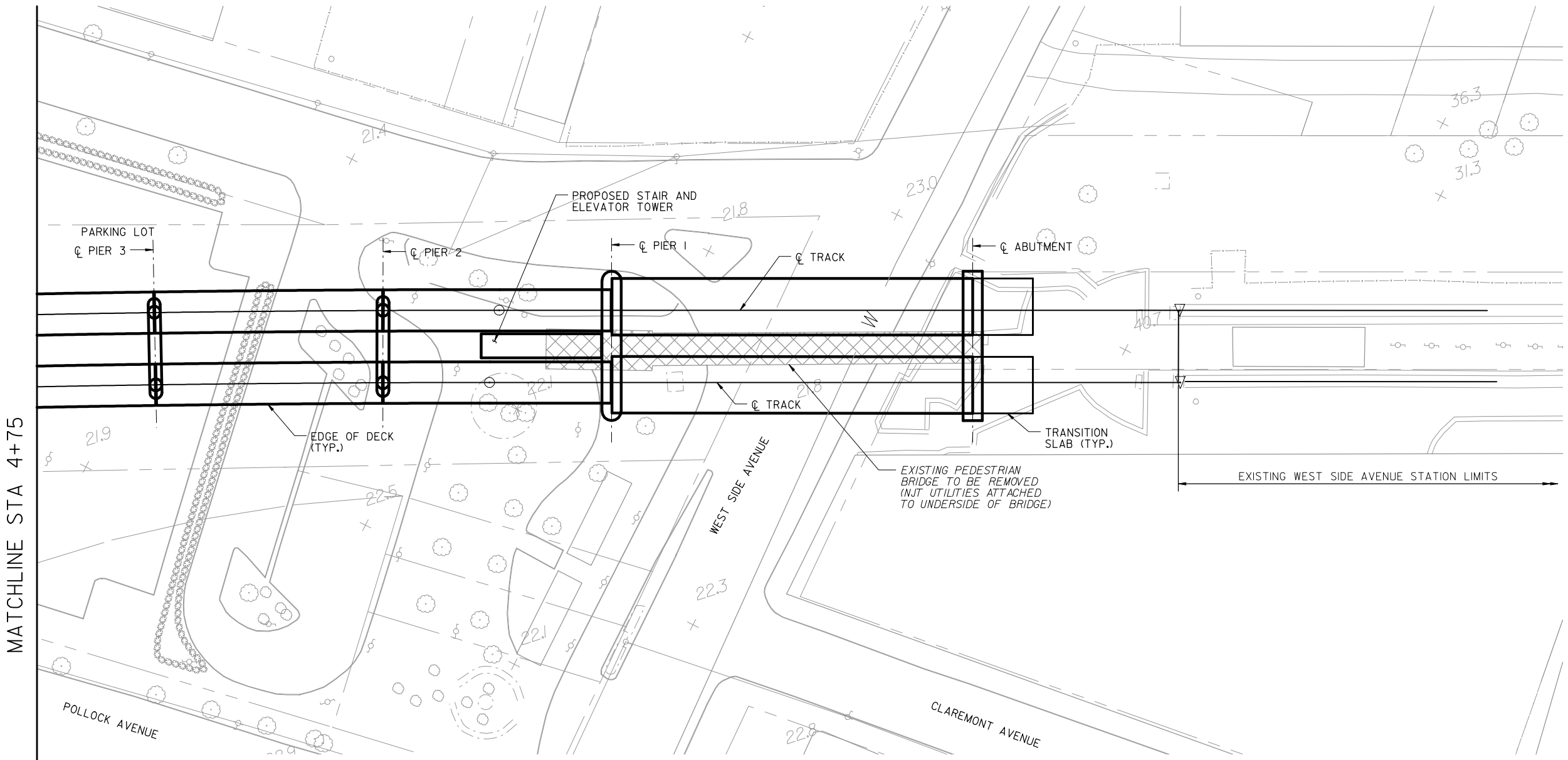

PLAN

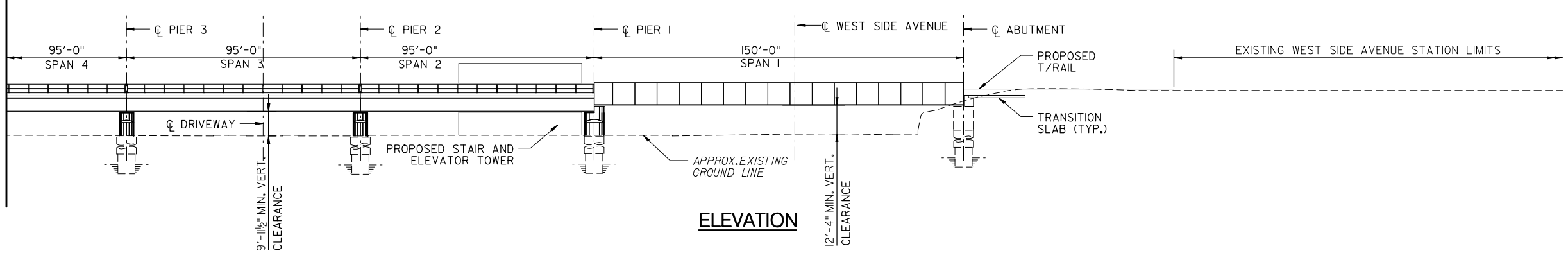

ELEVATION

NJ TRANSIT

Gannett Fleming Transit & Rail Systems

AKRF

DATE:	REVISIONS	No.

DESIGNED: P. THOMPSON
DRAWN: P. THOMPSON
CHECKED: W. FARROW
APPROVED:

HUDSON-BERGEN LIGHT RAIL
ROUTE 440 EXTENSION ALTERNATIVES ANALYSIS

ALIGNMENT ALTERNATIVE 1C
GENERAL PLAN AND ELEVATION 6
STA 0+00 TO STA 4+75

SCALE: 1" = 50'
FILE NAME:
DRAWING No.: REV:
DATE: DECEMBER 2010

CONTRACT No.
ISSUE: ALTERNATIVES ANALYSIS
SHEET No. 12 OF 19

NOTE: DO NOT SCALE THIS DRAWING

1/6/2011 2:01:07 PM
J:\052051 AKRF - NJ TRANSIT HBLR 440 EXTENSION\05-WORKING TECHNICAL\STRUCTURAL\CADD\SHEETS\RT_440-STR_GPE1C06.DGN

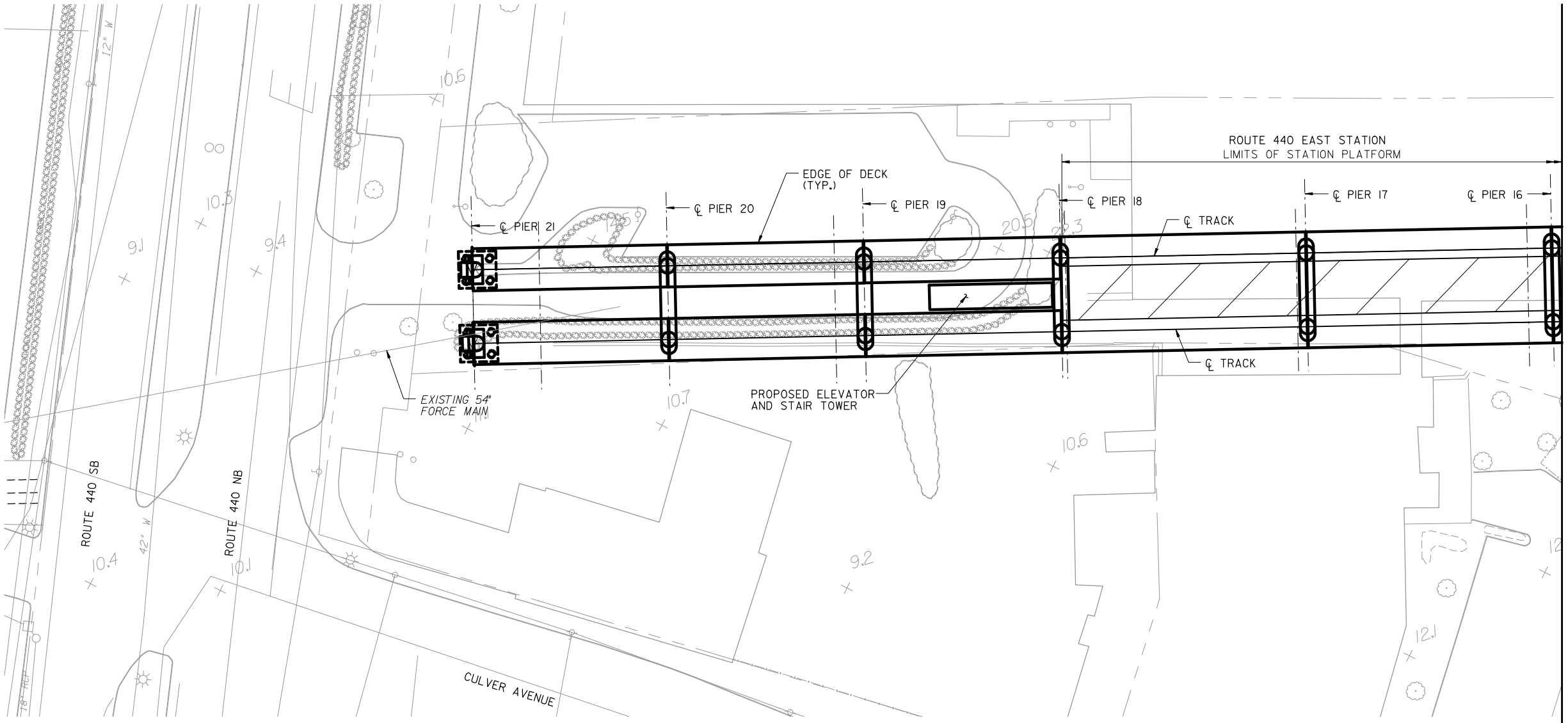

PLAN

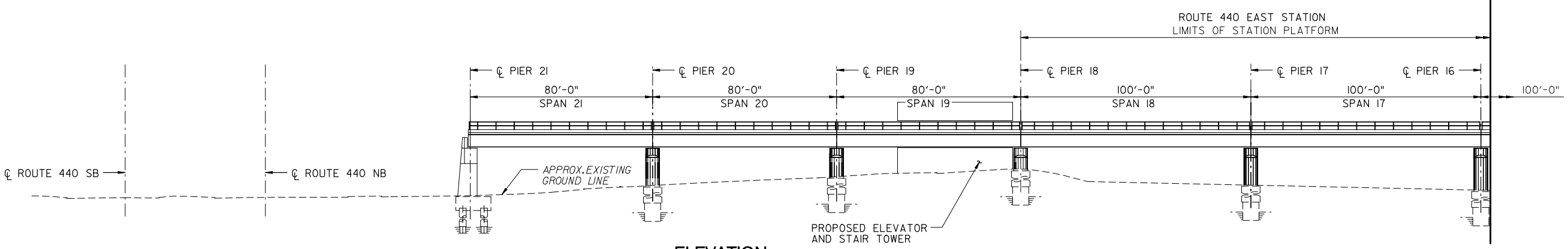

ELEVATION

NJTRANSIT

Gannett Fleming Transit & Rail Systems

AKRF

DATE:	REVISIONS	No.

DESIGNED: P. THOMPSON
DRAWN: P. THOMPSON
CHECKED: W. FARROW
APPROVED:

HUDSON-BERGEN LIGHT RAIL
ROUTE 440 EXTENSION ALTERNATIVES ANALYSIS

ALIGNMENT ALTERNATIVE 1D
GENERAL PLAN AND ELEVATION 1
STA 17+44 TO END VIADUCT

SCALE: 1" = 50'
FILE NAME:
DRAWING No.: REV:
DATE: DECEMBER 2010

CONTRACT No.
ISSUE: ALTERNATIVES ANALYSIS
SHEET No. 13 OF 19

NOTE: DO NOT SCALE THIS DRAWING

1/6/2011 2:01:13 PM
J:\052051 AKRF - NJ TRANSIT HBLR 440 EXTENSION\05-WORKING TECHNICAL\STRUCTURAL\CADD\SHEETS\RT_440-STR_GPE1D03.DGN

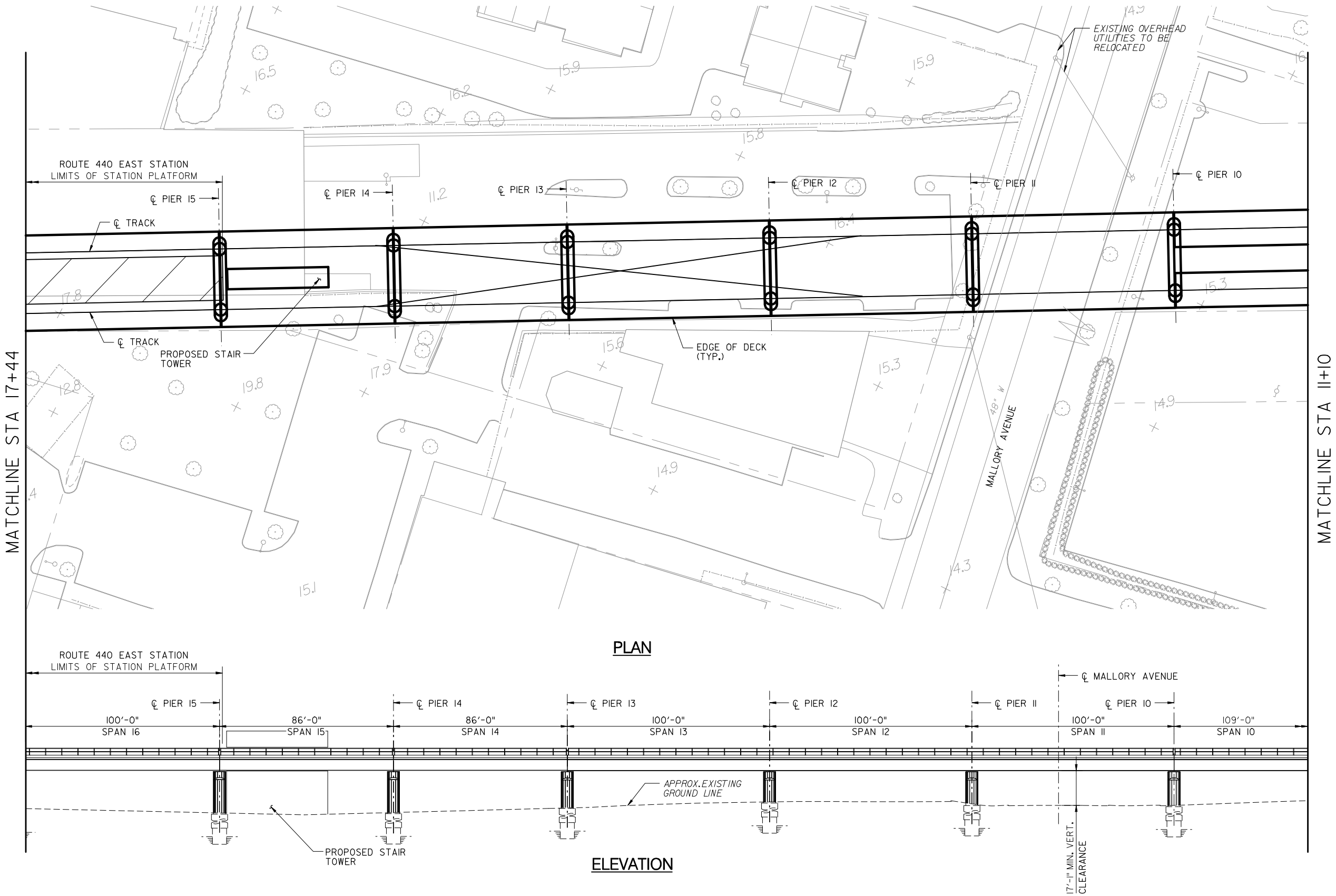

NJ TRANSIT

Gannett Fleming Transit & Rail Systems

AKRF

DATE:	REVISIONS	No.

DESIGNED: P. THOMPSON
DRAWN: P. THOMPSON
CHECKED: W. FARROW
APPROVED:

HUDSON-BERGEN LIGHT RAIL
ROUTE 440 EXTENSION ALTERNATIVES ANALYSIS

ALIGNMENT ALTERNATIVE 1D
GENERAL PLAN AND ELEVATION 2
STA 11+10 TO STA 17+44

SCALE: 1" = 50'
FILE NAME:
DRAWING No.: REV:
DATE: DECEMBER 2010

CONTRACT No.
ISSUE: ALTERNATIVES ANALYSIS
SHEET No. 14 OF 19

NOTE: DO NOT SCALE THIS DRAWING

1/6/2011 2:01:15 PM
J:\052051 AKRF - NJ TRANSIT HBLR 440 EXTENSION\05-WORKING TECHNICAL\STRUCTURAL\CADD\SHEETS\RT_440-STR_GPE1D04.DGN

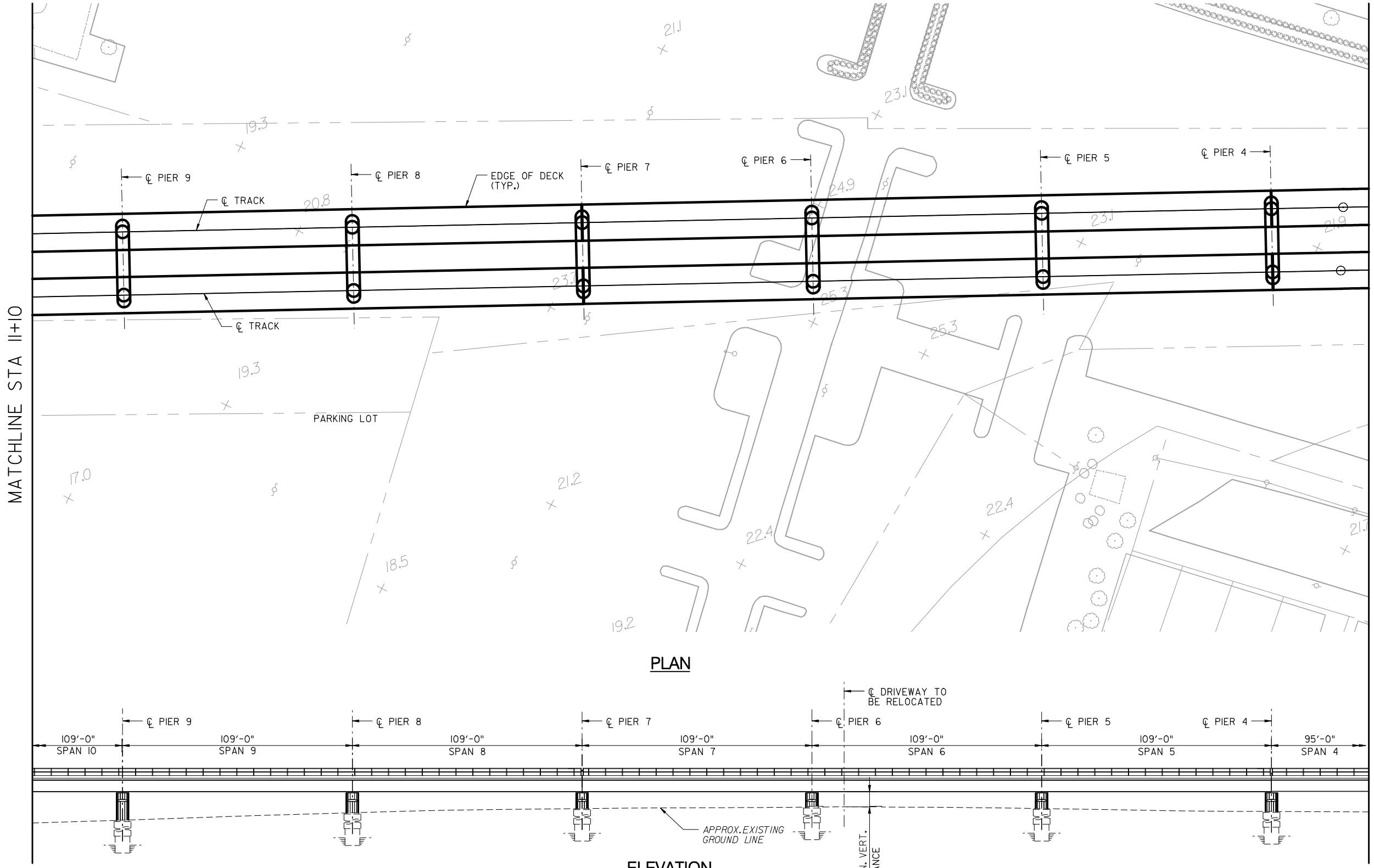

1/6/2011 2:01:18 PM
J:\052051 AKRF - NJ TRANSIT HBLR 440 EXTENSION\05-WORKING TECHNICAL\STRUCTURAL\CADD\SHEETS\RT_440-STR_GPE1D05.DGN

NJ TRANSIT

Gannett Fleming Transit & Rail Systems

AKRF

DATE:	REVISIONS	No.

DESIGNED: P. THOMPSON
DRAWN: P. THOMPSON
CHECKED: W. FARROW
APPROVED:

HUDSON-BERGEN LIGHT RAIL
ROUTE 440 EXTENSION ALTERNATIVES ANALYSIS

ALIGNMENT ALTERNATIVE 1D
GENERAL PLAN AND ELEVATION 3
STA 4+75 TO STA 11+10

SCALE: 1" = 50'
FILE NAME:
DRAWING No.: REV:
DATE: DECEMBER 2010

CONTRACT No.
ISSUE: ALTERNATIVES ANALYSIS
SHEET No. 15 OF 19

NOTE: DO NOT SCALE THIS DRAWING

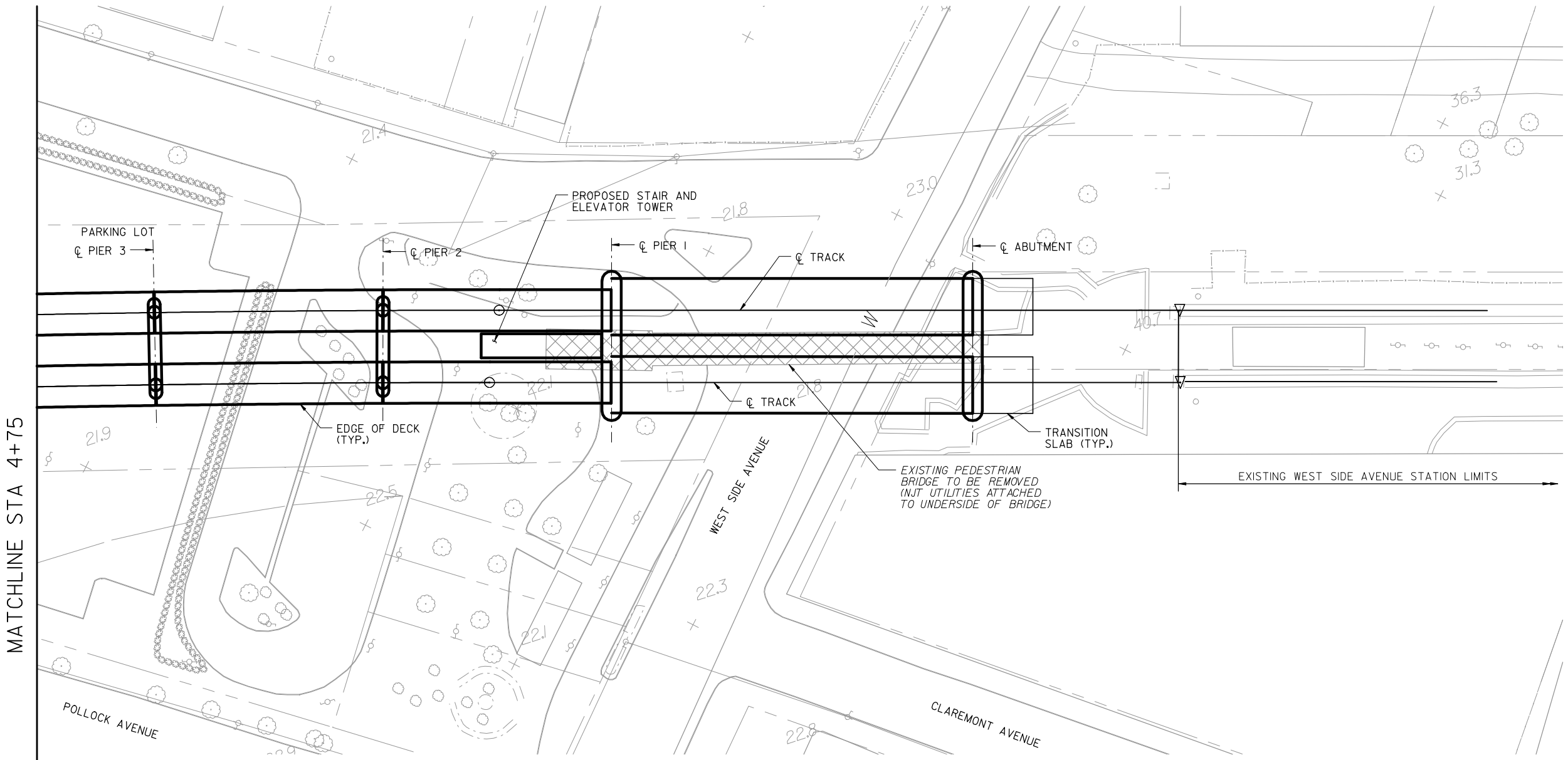

PLAN

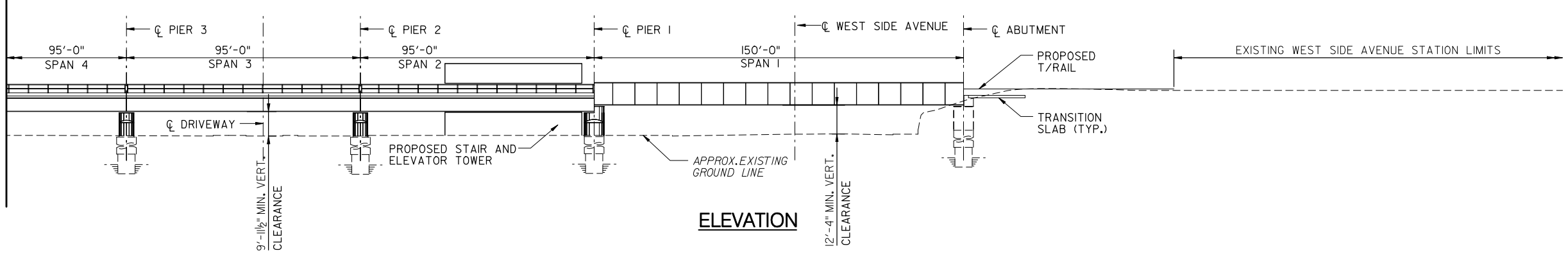

ELEVATION

NJ TRANSIT

Gannett Fleming Transit & Rail Systems

AKRF

DATE:	REVISIONS	No.

DESIGNED: P. THOMPSON
DRAWN: P. THOMPSON
CHECKED: W. FARROW
APPROVED:

HUDSON-BERGEN LIGHT RAIL
ROUTE 440 EXTENSION ALTERNATIVES ANALYSIS

ALIGNMENT ALTERNATIVE 1D
GENERAL PLAN AND ELEVATION 4
STA 0+00 TO STA 4+75

SCALE: 1" = 50'
FILE NAME:
DRAWING No.: REV:
DATE: DECEMBER 2010

CONTRACT No.
ISSUE: ALTERNATIVES ANALYSIS
SHEET No. 16 OF 19

NOTE: DO NOT SCALE THIS DRAWING

1/6/2011 2:01:20 PM
J:\052051 AKRF - NJ TRANSIT HBLR 440 EXTENSION\05-WORKING TECHNICAL\STRUCTURAL\CADD\SHEETS\RT_440-STR_GPE1D06.DGN

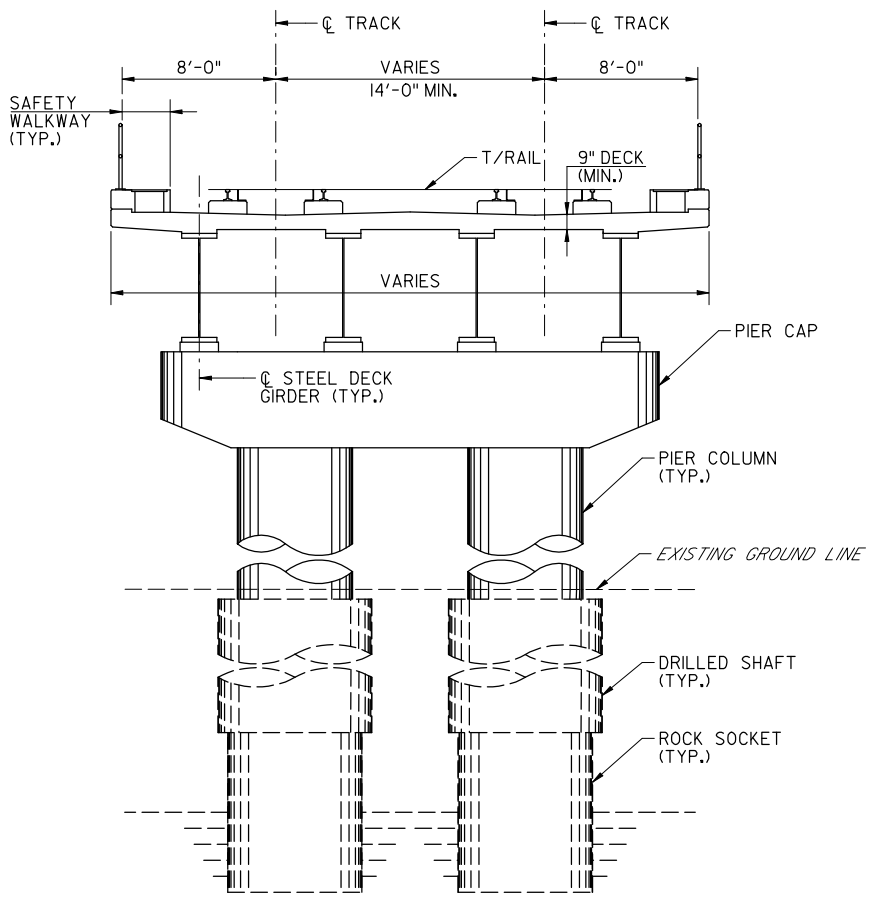

TYPICAL SECTION

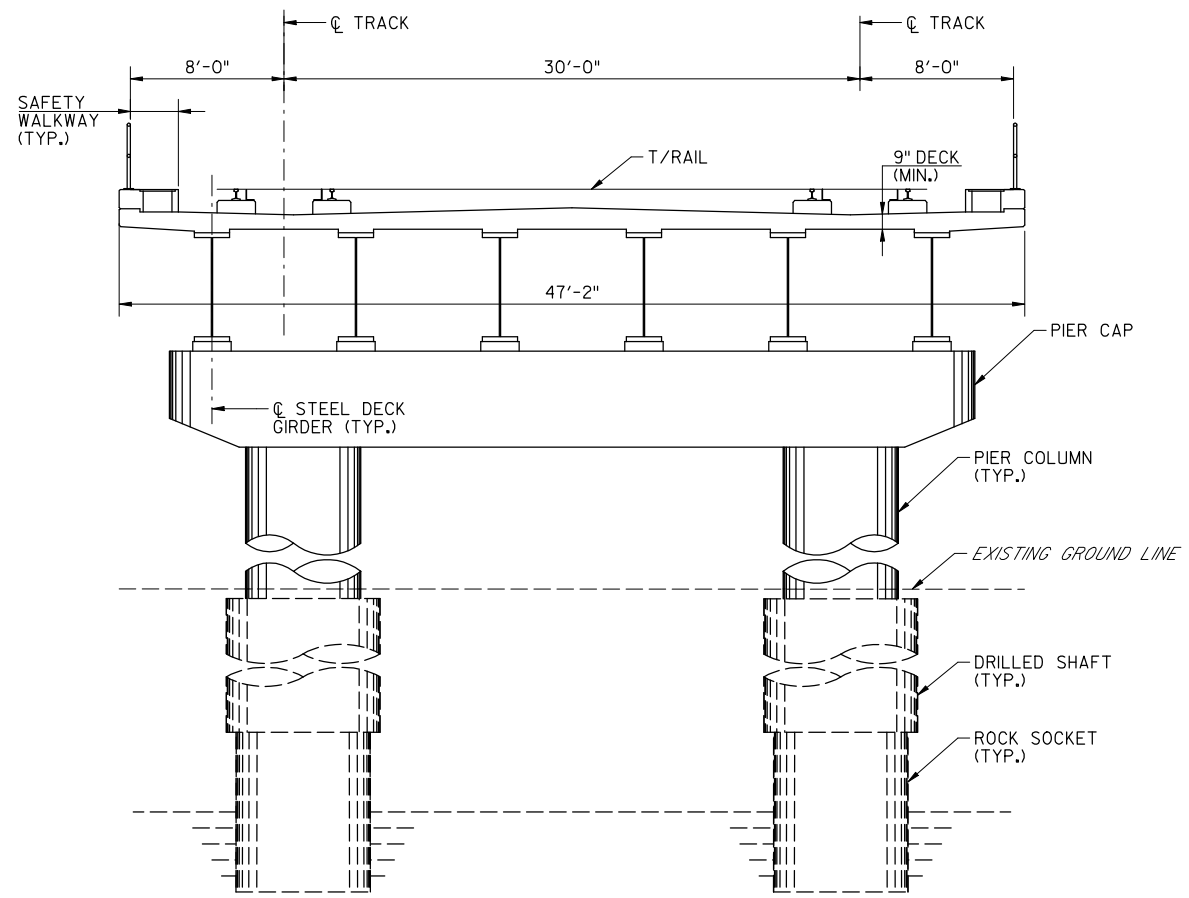

TYPICAL SECTION AT CROSSOVERS

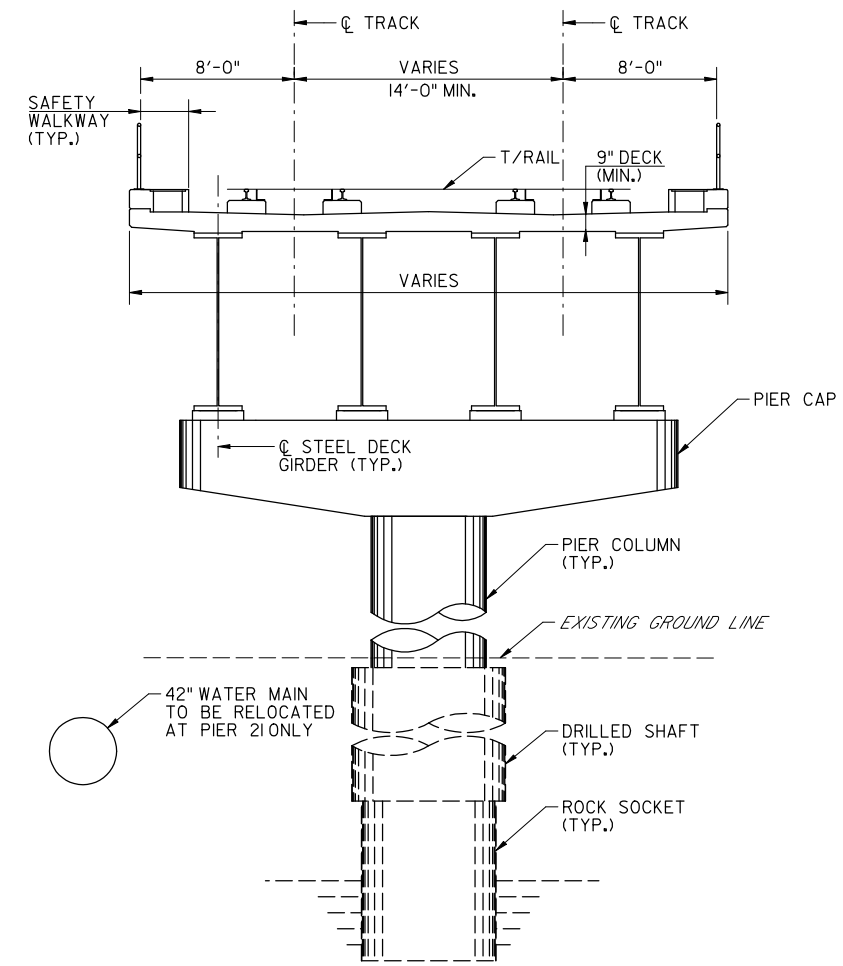

TYPICAL SECTION OVER ROUTE 440

1/6/2011 2:01:23 PM
J:\052051 AKRF - NJ TRANSIT HBLR 440 EXTENSION\05-WORKING TECHNICAL\STRUCTURAL\CADD\SHEETS\RT_440-STR_TS1.DGN

NJ TRANSIT

Gannett Fleming Transit & Rail Systems

AKRF

DATE:	REVISIONS	No.

DESIGNED: P. THOMPSON
DRAWN: P. THOMPSON
CHECKED: W. FARROW
APPROVED:

HUDSON-BERGEN LIGHT RAIL
ROUTE 440 EXTENSION ALTERNATIVES ANALYSIS

ALIGNMENT ALTERNATIVES 1A, 1C, AND 1D
TYPICAL SECTIONS 1

SCALE: 1" = 10'
FILE NAME:
DRAWING No.: REV:
DATE: DECEMBER 2010

CONTRACT No.
ISSUE: ALTERNATIVES ANALYSIS
SHEET No. 17 OF 19

NOTE: DO NOT SCALE THIS DRAWING

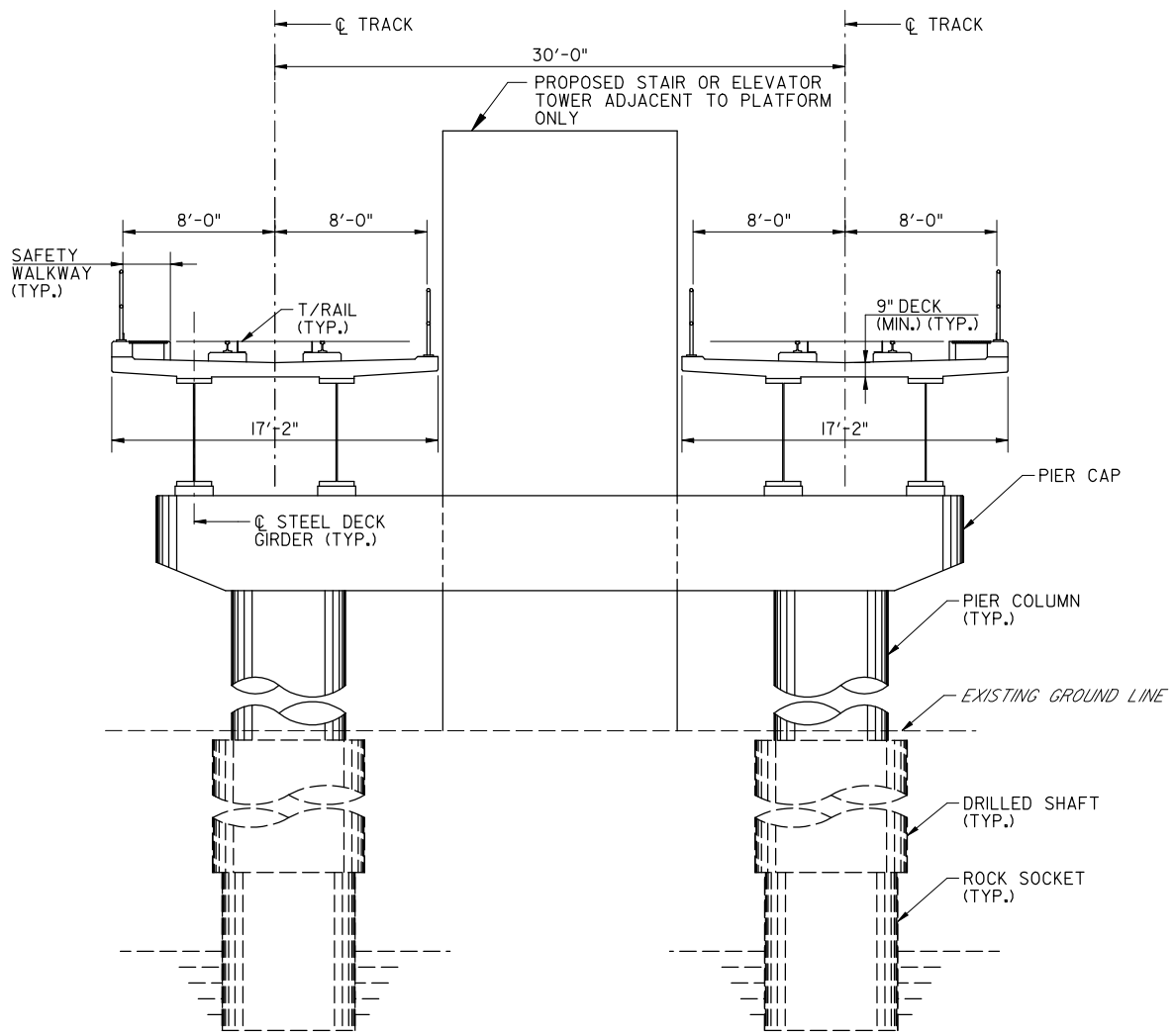

TYPICAL SECTION AT SEPARATED STRUCTURES

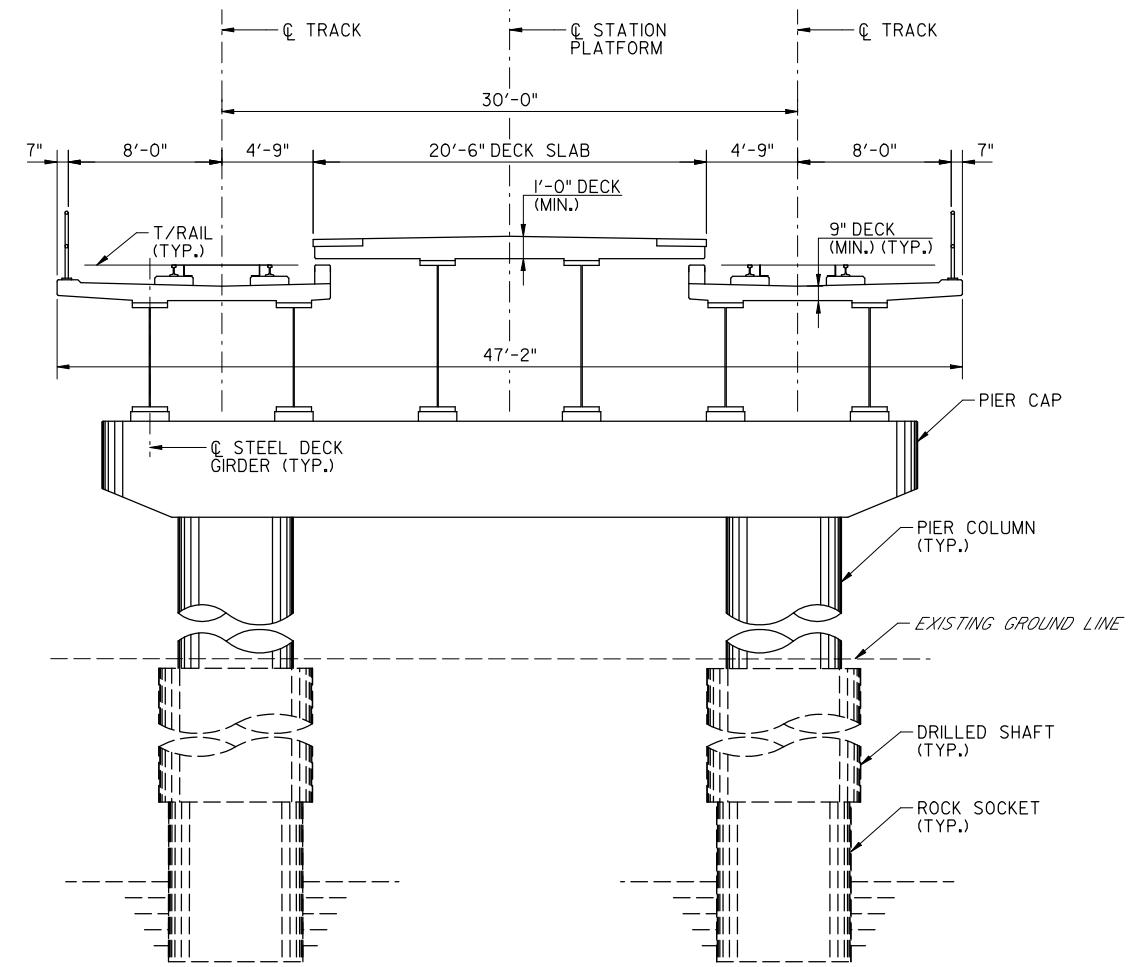

TYPICAL SECTION AT STATION THROUGH PLATFORM

NJ TRANSIT

Gannett Fleming Transit & Rail Systems

AKRF

DATE:	REVISIONS	No.

DESIGNED: P. THOMPSON
DRAWN: P. THOMPSON
CHECKED: W. FARROW
APPROVED:

HUDSON-BERGEN LIGHT RAIL
ROUTE 440 EXTENSION ALTERNATIVES ANALYSIS

ALIGNMENT ALTERNATIVES 1A, 1C, AND 1D
TYPICAL SECTIONS 2

SCALE: 1" = 10'
FILE NAME:
DRAWING No.: REV:
DATE: DECEMBER 2010

CONTRACT No.
ISSUE: ALTERNATIVES ANALYSIS
SHEET No. 18 OF 19

NOTE: DO NOT SCALE THIS DRAWING

1/6/2011 2:01:24 PM
J:\052051 AKRF - NJ TRANSIT HBLR 440 EXTENSION\05-WORKING TECHNICAL\STRUCTURAL\CADD\SHEETS\RT_440-STR_TS2.DGN

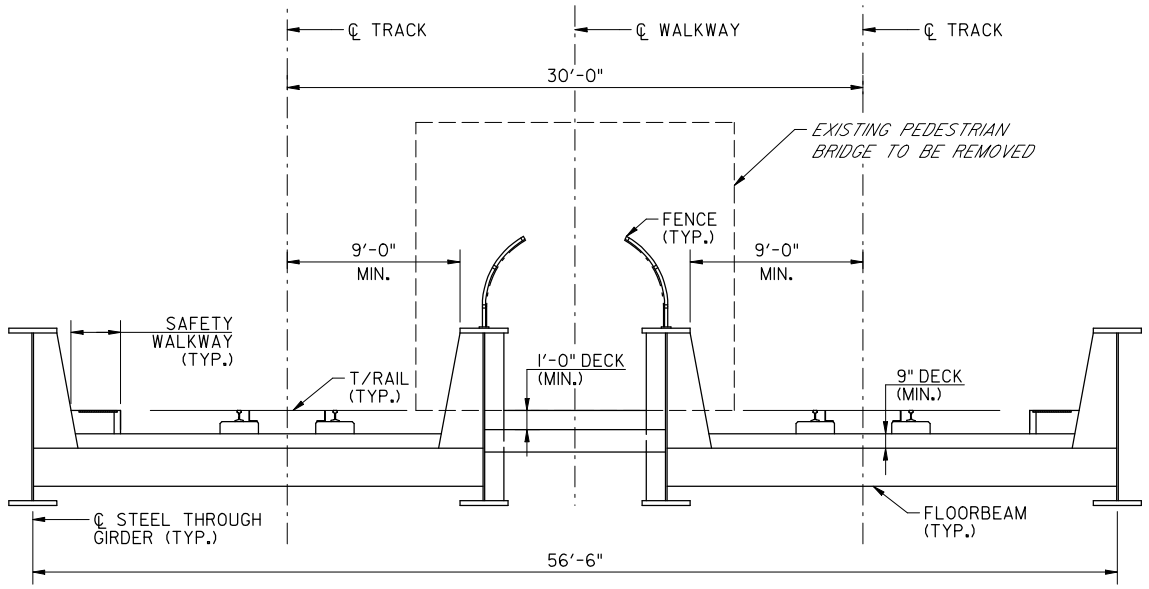

TYPICAL SECTION OVER WEST SIDE AVENUE

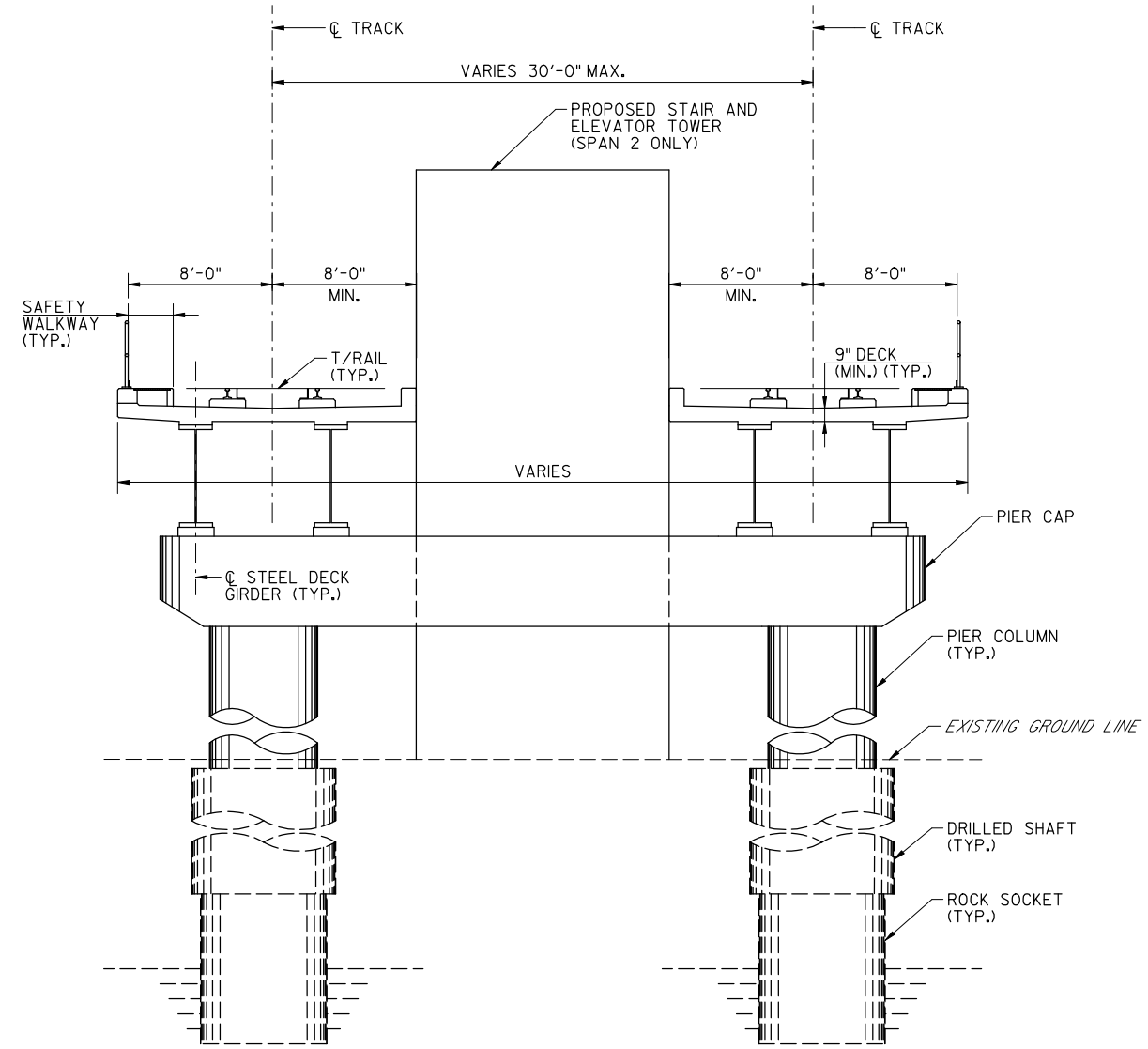

TYPICAL SECTION SPANS 2 THROUGH 4

1/6/2011 2:01:26 PM
J:\052051 AKRF - NJ TRANSIT HBLR 440 EXTENSION\05-WORKING TECHNICAL\STRUCTURAL\CADD\SHEETS\RT_440-STR_TS3.DGN

NJ TRANSIT

Gannett Fleming Transit & Rail Systems

AKRF

DATE:	REVISIONS	No.

DESIGNED: P. THOMPSON
DRAWN: P. THOMPSON
CHECKED: W. FARROW
APPROVED:

HUDSON-BERGEN LIGHT RAIL
ROUTE 440 EXTENSION ALTERNATIVES ANALYSIS

ALIGNMENT ALTERNATIVES 1A, 1C, AND 1D
TYPICAL SECTIONS 3

SCALE: 1" = 10'
FILE NAME:
DRAWING No.: REV:
DATE: DECEMBER 2010

CONTRACT No.
ISSUE: ALTERNATIVES ANALYSIS
SHEET No. 19 OF 19

NOTE: DO NOT SCALE THIS DRAWING